Cambridge International AS & A Level

Cambridge International Examinations
Cambridge International Advanced Subsidiary and Advanced Level

CANDIDATE NAME

CENTRE NUMBER | | | | | |

CANDIDATE NUMBER | | | | |

2800127880

PHYSICS **9702/22**

Paper 2 AS Level Structured Questions **October/November 2017**

1 hour 15 minutes

Candidates answer on the Question Paper.

No Additional Materials are required.

READ THESE INSTRUCTIONS FIRST

Write your Centre number, candidate number and name on all the work you hand in.
Write in dark blue or black pen.
You may use an HB pencil for any diagrams or graphs.
Do not use staples, paper clips, glue or correction fluid.
DO **NOT** WRITE IN ANY BARCODES.

Answer **all** questions.

Electronic calculators may be used.
You may lose marks if you do not show your working or if you do not use appropriate units.

At the end of the examination, fasten all your work securely together.
The number of marks is given in brackets [ ] at the end of each question or part question.

This document consists of **15** printed pages and **1** blank page.

© UCLES 2017

CAMBRIDGE International Examinations

Data

speed of light in free space	$c = 3.00 \times 10^{8}\,\text{m s}^{-1}$
permeability of free space	$\mu_0 = 4\pi \times 10^{-7}\,\text{H m}^{-1}$
permittivity of free space	$\varepsilon_0 = 8.85 \times 10^{-12}\,\text{F m}^{-1}$
	$(\frac{1}{4\pi\varepsilon_0} = 8.99 \times 10^{9}\,\text{m F}^{-1})$
elementary charge	$e = 1.60 \times 10^{-19}\,\text{C}$
the Planck constant	$h = 6.63 \times 10^{-34}\,\text{J s}$
unified atomic mass unit	$1\,\text{u} = 1.66 \times 10^{-27}\,\text{kg}$
rest mass of electron	$m_e = 9.11 \times 10^{-31}\,\text{kg}$
rest mass of proton	$m_p = 1.67 \times 10^{-27}\,\text{kg}$
molar gas constant	$R = 8.31\,\text{J K}^{-1}\,\text{mol}^{-1}$
the Avogadro constant	$N_A = 6.02 \times 10^{23}\,\text{mol}^{-1}$
the Boltzmann constant	$k = 1.38 \times 10^{-23}\,\text{J K}^{-1}$
gravitational constant	$G = 6.67 \times 10^{-11}\,\text{N m}^2\,\text{kg}^{-2}$
acceleration of free fall	$g = 9.81\,\text{m s}^{-2}$

© UCLES 2017

Formulae

uniformly accelerated motion	$s = ut + \frac{1}{2}at^2$ $v^2 = u^2 + 2as$
work done on/by a gas	$W = p\Delta V$
gravitational potential	$\phi = -\frac{Gm}{r}$
hydrostatic pressure	$p = \rho gh$
pressure of an ideal gas	$p = \frac{1}{3}\frac{Nm}{V}\langle c^2 \rangle$
simple harmonic motion	$a = -\omega^2 x$
velocity of particle in s.h.m.	$v = v_0 \cos \omega t$ $v = \pm \omega \sqrt{(x_0^2 - x^2)}$
Doppler effect	$f_o = \frac{f_s v}{v \pm v_s}$
electric potential	$V = \frac{Q}{4\pi\varepsilon_0 r}$
capacitors in series	$1/C = 1/C_1 + 1/C_2 + \ldots$
capacitors in parallel	$C = C_1 + C_2 + \ldots$
energy of charged capacitor	$W = \frac{1}{2}QV$
electric current	$I = Anvq$
resistors in series	$R = R_1 + R_2 + \ldots$
resistors in parallel	$1/R = 1/R_1 + 1/R_2 + \ldots$
Hall voltage	$V_H = \frac{BI}{ntq}$
alternating current/voltage	$x = x_0 \sin \omega t$
radioactive decay	$x = x_0 \exp(-\lambda t)$
decay constant	$\lambda = \frac{0.693}{t_{\frac{1}{2}}}$

© UCLES 2017

[Turn over

Answer **all** the questions in the spaces provided.

1 One end of a wire is connected to a fixed point. A load is attached to the other end so that the wire hangs vertically.

The diameter d of the wire and the load F are measured as

$d = 0.40 \pm 0.02\,\text{mm}$,
$F = 25.0 \pm 0.5\,\text{N}$.

(a) For the measurement of the diameter of the wire, state

(i) the name of a suitable measuring instrument,

.....[1]

(ii) how random errors may be reduced when using the instrument in **(i)**.

.....

.....

.....[2]

(b) The stress σ in the wire is calculated by using the expression

$$\sigma = \frac{4F}{\pi d^2}.$$

(i) Show that the value of σ is $1.99 \times 10^8\,\text{N m}^{-2}$.

[1]

(ii) Determine the percentage uncertainty in σ.

percentage uncertainty = ...% [2]

© UCLES 2017

(iii) Use the information in **(b)(i)** and your answer in **(b)(ii)** to determine the value of σ, with its absolute uncertainty, to an appropriate number of significant figures.

σ = ... ± ..... $N\,m^{-2}$ [2]

[Total: 8]

BLANK PAGE

© UCLES 2017

2 **(a)** Define the *moment* of a force.

.....

.....[1]

(b) A thin disc of radius r is supported at its centre O by a pin. The disc is supported so that it is vertical. Three forces act in the plane of the disc, as shown in Fig. 2.1.

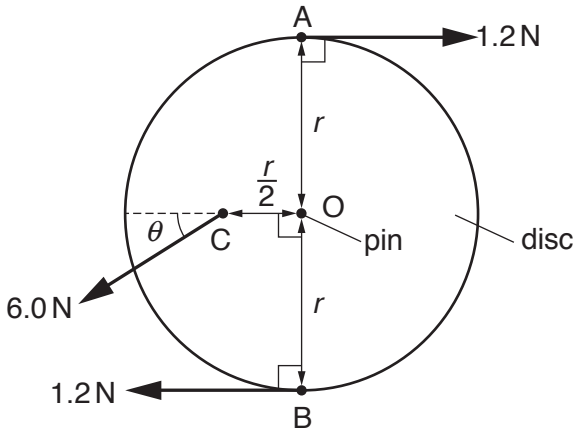

Fig. 2.1

Two horizontal and opposite forces, each of magnitude 1.2 N, act at points A and B on the edge of the disc. A force of 6.0 N, at an angle θ below the horizontal, acts on the midpoint C of a radial line of the disc, as shown in Fig. 2.1. The disc has negligible weight and is in equilibrium.

(i) State an expression, in terms of r, for the torque of the couple due to the forces at A and B acting on the disc.

.....[1]

(ii) Friction between the disc and the pin is negligible.
Determine the angle θ.

θ = ... ° [2]

(iii) State the magnitude of the force of the pin on the disc.

force = ... N [1]

[Total: 5]

© UCLES 2017

3 A spring is attached at one end to a fixed point and hangs vertically with a cube attached to the other end. The cube is initially held so that the spring has zero extension, as shown in Fig. 3.1.

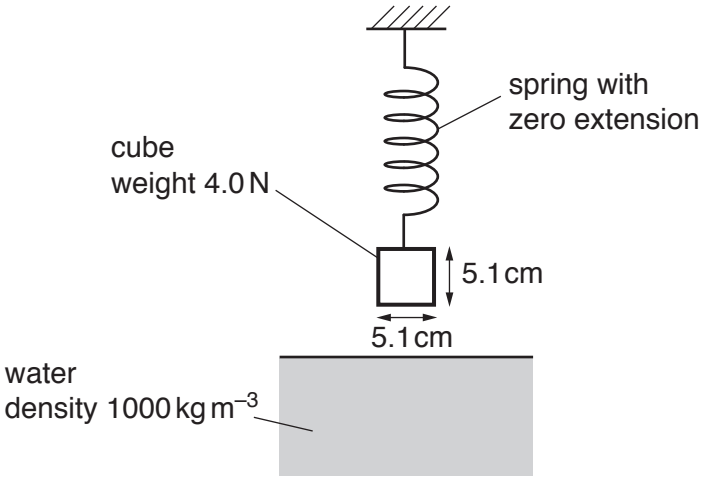

Fig. 3.1

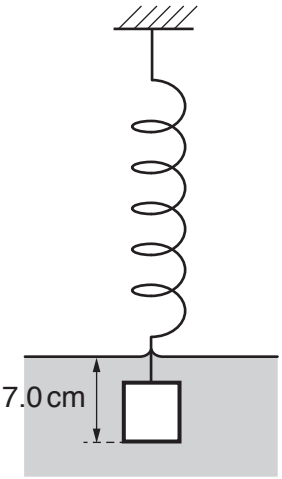

Fig. 3.2

The cube has weight 4.0 N and sides of length 5.1 cm. The cube is released and sinks into water as the spring extends. The cube reaches equilibrium with its base at a depth of 7.0 cm below the water surface, as shown in Fig. 3.2.
The density of the water is 1000 kg m^{-3}.

(a) Calculate the difference in the pressure exerted by the water on the bottom face and on the top face of the cube.

difference in pressure = ... Pa [2]

(b) Use your answer in **(a)** to show that the upthrust on the cube is 1.3 N.

[2]

© UCLES 2017

(c) Calculate the force exerted on the spring by the cube when it is in equilibrium in the water.

force = ... N [1]

(d) The spring obeys Hooke's law and has a spring constant of $30\,N\,m^{-1}$.

Determine the initial height above the water surface of the base of the cube before it was released.

height above surface = ... cm [3]

(e) The cube in the water is released from the spring.

(i) Determine the initial acceleration of the cube.

acceleration = ...$m\,s^{-2}$ [2]

(ii) Describe and explain the variation, if any, of the acceleration of the cube as it sinks in the water.

.....

.....

.....[2]

[Total: 12]

© UCLES 2017

[Turn over

4 **(a)** State the conditions required for the formation of a stationary wave.

.....

.....

.....

.....[2]

(b) A horizontal string is stretched between two fixed points X and Y. The string is made to vibrate vertically so that a stationary wave is formed. At one instant, each particle of the string is at its maximum displacement, as shown in Fig. 4.1.

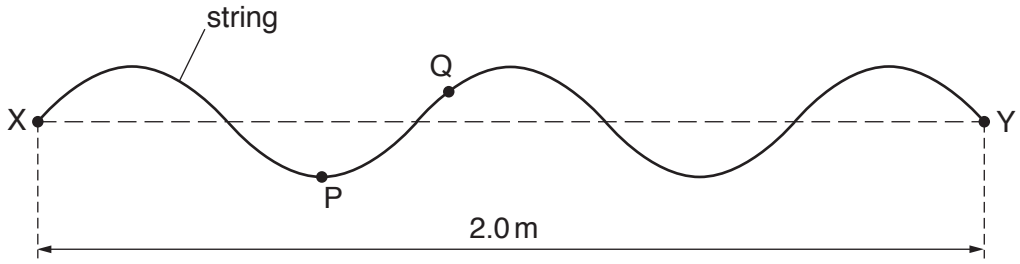

Fig. 4.1

P and Q are two particles of the string. The string vibrates with a frequency of 40 Hz. Distance XY is 2.0 m.

(i) State the number of antinodes in the stationary wave.

number = ...[1]

(ii) Determine the minimum time taken for the particle P to travel from its lowest point to its highest point.

time taken = ... s [2]

(iii) State the phase difference, with its unit, between the vibrations of particle P and of particle Q.

phase difference = ...[1]

© UCLES 2017

(iv) Determine the speed of a progressive wave along the string.

speed = ...m s^{-1} [2]

[Total: 8]

5 **(a)** Define the *coulomb*.

.....[1]

(b) Two vertical metal plates in a vacuum have a separation of 4.0 cm. A potential difference of 2.0×10^2 V is applied between the plates. Fig. 5.1 shows a side view of this arrangement.

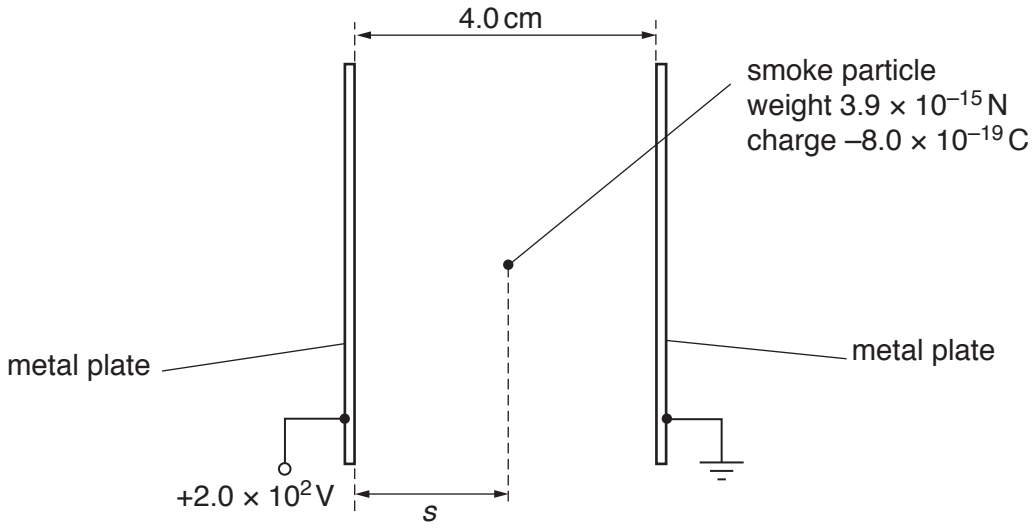

Fig. 5.1

A smoke particle is in the uniform electric field between the plates. The particle has weight 3.9×10^{-15} N and charge -8.0×10^{-19} C.

(i) Show that the electric force acting on the particle is 4.0×10^{-15} N.

[2]

(ii) On Fig. 5.1, draw labelled arrows to show the directions of the two forces acting on the smoke particle. [1]

© UCLES 2017

(iii) The resultant force acting on the particle is F.

Determine

1. the magnitude of F,

magnitude = ... N

2. the angle of F to the horizontal.

angle = ... °

[3]

(c) The electric field in **(b)** is switched on at time $t = 0$ when the particle is at a horizontal displacement $s = 2.0\,\text{cm}$ from the left-hand plate. At time $t = 0$ the horizontal velocity of the particle is zero. The particle is then moved by the electric field until it hits a plate at time $t = T$.

On Fig. 5.2, sketch the variation with time t of the horizontal displacement s of the particle from the left-hand plate.

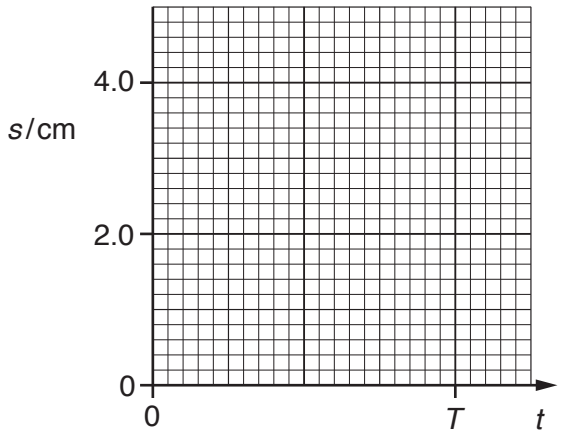

Fig. 5.2

[2]

[Total: 9]

6 **(a)** State what is meant by an *electric current*.

.....[1]

(b) A metal wire has length L and cross-sectional area A, as shown in Fig. 6.1.

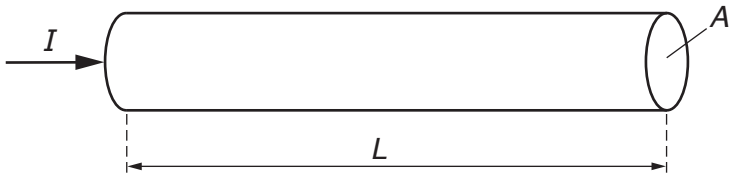

Fig. 6.1

I is the current in the wire,
n is the number of free electrons per unit volume in the wire,
v is the average drift speed of a free electron and
e is the charge on an electron.

(i) State, in terms of A, e, L and n, an expression for the total charge of the free electrons in the wire.

.....[1]

(ii) Use your answer in **(i)** to show that the current I is given by the equation

$$I = nAve.$$

[2]

(c) A metal wire in a circuit is damaged. The resistivity of the metal is unchanged but the cross-sectional area of the wire is reduced over a length of 3.0 mm, as shown in Fig. 6.2.

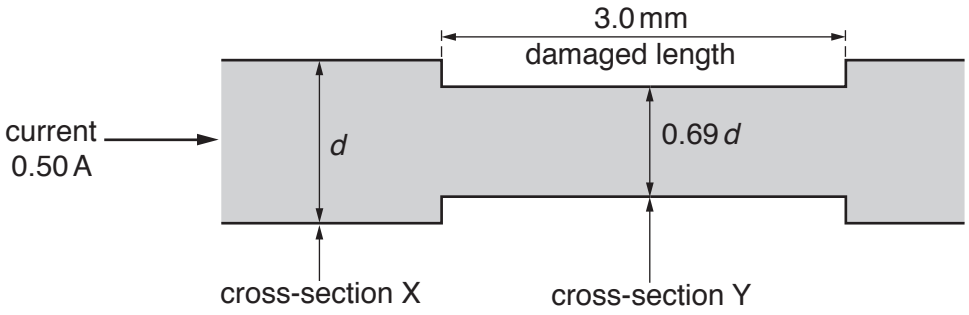

Fig. 6.2

The wire has diameter d at cross-section X and diameter $0.69d$ at cross-section Y.
The current in the wire is 0.50 A.

© UCLES 2017

(i) Determine the ratio

$$\frac{\text{average drift speed of free electrons at cross-section Y}}{\text{average drift speed of free electrons at cross-section X}}.$$

ratio = ...[2]

(ii) The main part of the wire with cross-section X has a resistance per unit length of $1.7 \times 10^{-2}\,\Omega\,m^{-1}$.

For the damaged length of the wire, calculate

1. the resistance per unit length,

resistance per unit length = ... $\Omega\,m^{-1}$ [2]

2. the power dissipated.

power = ... W [2]

(iii) The diameter of the damaged length of the wire is further decreased. Assume that the current in the wire remains constant.

State and explain qualitatively the change, if any, to the power dissipated in the damaged length of the wire.

.....

.....

.....[2]

[Total: 12]

7 A stationary nucleus X decays by emitting a β^+ particle to form a nucleus of carbon-13 ($^{13}_{6}C$). An incomplete equation to represent this decay is

$$X \rightarrow {}^{13}_{6}C + \beta^+.$$

(a) State the name of the class (group) of particles that includes β^+.

.....[1]

(b) For nucleus X, state the number of

protons, ...

neutrons. ..... [1]

(c) The carbon-13 nucleus has a mass of 2.2×10^{-26} kg. Its kinetic energy as a result of the decay process is 0.80 MeV.

Calculate the speed of this nucleus.

speed = ... $m\,s^{-1}$ [3]

(d) Explain why the sum of the kinetic energies of the carbon-13 nucleus and the β^+ particle cannot be equal to the total energy released by the decay process.

.....

.....[1]

[Total: 6]

Permission to reproduce items where third-party owned material protected by copyright is included has been sought and cleared where possible. Every reasonable effort has been made by the publisher (UCLES) to trace copyright holders, but if any items requiring clearance have unwittingly been included, the publisher will be pleased to make amends at the earliest possible opportunity.

To avoid the issue of disclosure of answer-related information to candidates, all copyright acknowledgements are reproduced online in the Cambridge International Examinations Copyright Acknowledgements Booklet. This is produced for each series of examinations and is freely available to download at www.cie.org.uk after the live examination series.

Cambridge International Examinations is part of the Cambridge Assessment Group. Cambridge Assessment is the brand name of University of Cambridge Local Examinations Syndicate (UCLES), which is itself a department of the University of Cambridge.

© UCLES 2017